TAUNTON'S Fine WoodWorking.com

Router Table Box-Joint Jig

Drawings and Plan by:
Guido Henn

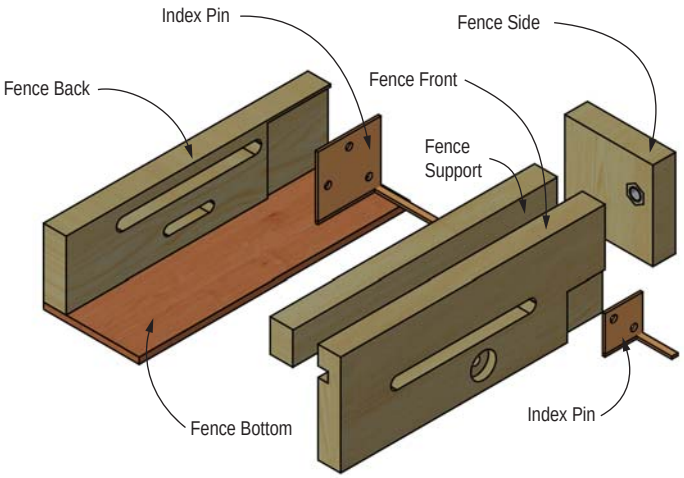

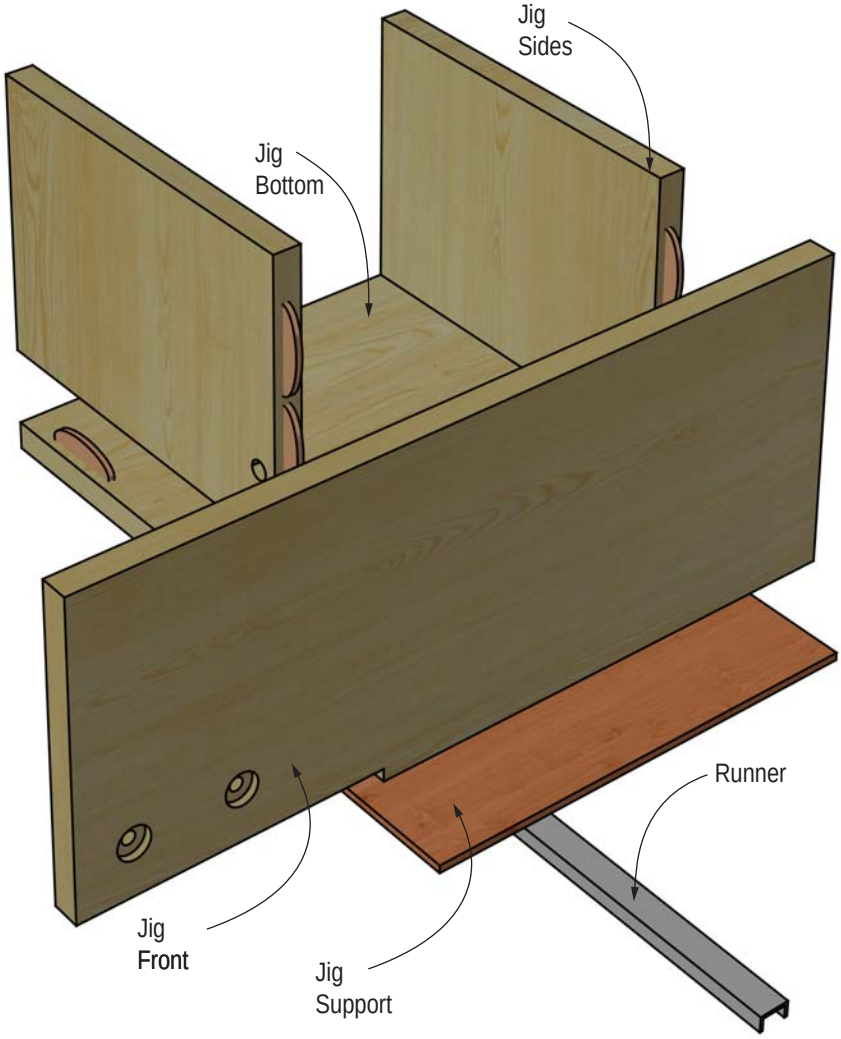

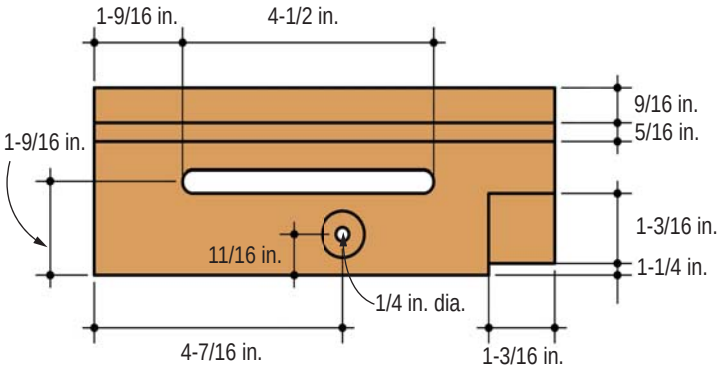

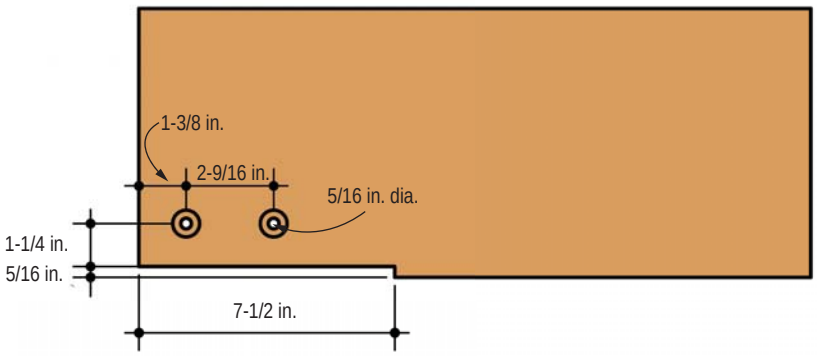

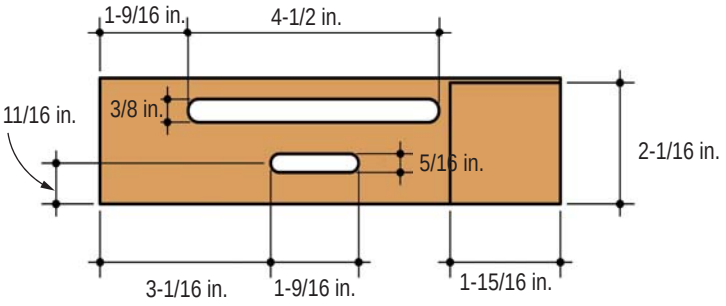

Part No.	Part Name	Dimensions
1	Jig Front	3/4 in. thick by 7-7/8 in. wide by 19-5/8 in. long
2	Jig Bottom	3/4 in. thick by 9-7/8 in. wide by 11-3/8 in. long
3	Jig Sides	3/4 in. thick by 7-1/8 in. wide by 9-7/8 in. long
4	Fence Front	3/4 in. thick by 3-1/8 in. wide by 8-1/4 in. long
5	Fence Back	3/4 in. thick by 2-1/8 in. wide by 8-1/4 in. long
6	Fence Support	3/4 in. thick by 1 in. wide by 8-1/4 in. long
7	Fence Side	3/4 in. thick by 2-3/4 in. square
8	Jig Support	1/4 in. thick by 11-3/8 in. square
9	Fence Bottom	1/4 in. thick by 3 in. wide by 8-1/2 in. long
10	Index Pin	1-1/8 in. square modified corner bracket
11	Index Pin	2 in. square modified corner bracket
12	Runner	3/8 in. thick by 3/4 in. wide by 22-1/2 in. long